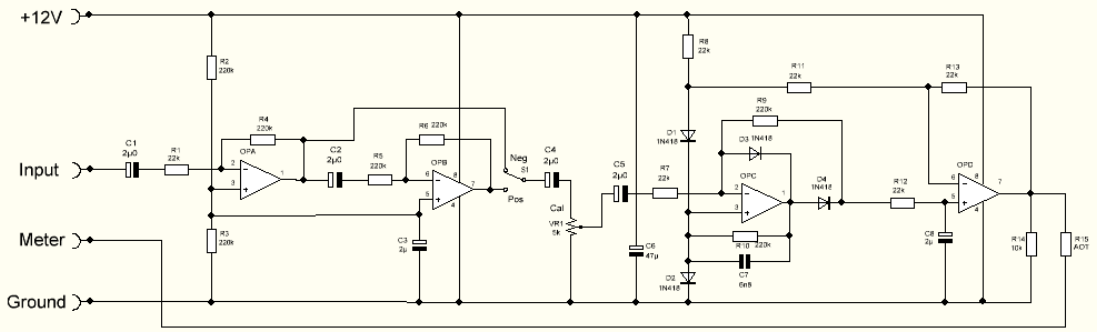

Deviation Meter Analog Section